CAMBRO

Camshelving® Ultimate #10 Can Rack

Premium Series Full-Size Rack
Elements XTRA Series Full-Size Rack

HEIGHT	DEPTH	LENGTH
1	1	1
72"	24"	36"

* Standard shelving depth. Actual assembled unit depth is 25.9" (65,8 cm).

- **Units include:** 1 or 2 factory assembled stationary post kits, 9 each traverses,15 each can rack panels and 72 each can rack brackets (12 bags of 6 each). Ships knockdown, complete in 1 carton.

Store Safe

Features & Benefits

- Easy to assemble, stationary can storage units with patented front loading, gravity fed rack component system that supports proper FIFO inventory management.
- Ideal for schools, colleges/universities, hospitals and any foodservice operation with high volume can usage/storage requirements. Install free standing units or share posts with other units to maximize space when combined with other units along a wall.
- Unique, can storage racks install directly onto 3 traverses – 2 front and 1 back. Side panels and brackets snap together. Connect and create 4 rows of can storage per level / tier.
- Store 8 each #10 cans or 12 each #5 cans per individual racks.
- Store 32 each #10 cans or 48 each #5 cans per level / tier.
- Can rack panels and brackets are made of highly durable plastic material that will never dent or bend with use. Once assembled and placed onto traverses, racks remain securely in place even with constant loading and removal of cans.
- Premium Series posts and traverses have a steel core and smooth polypropylene exterior for superior strength and durability. Traverse dovetails are molded into posts.
- Elements XTRA Series posts and traverses are made of extremely strong composite and plastic materials. Traverse dovetails must be installed onto the posts.
- Uniquely engineered Post Connectors offer exceptional cross stabilization. Weight bearing is uncompromised.
- Post and traverses easily wipe clean. Traverses, can rack panels and brackets can be removed and cleaned in the dishwasher.
- Requires minimal assembly. Use a rubber mallet only to install traverses.
- Lifetime warranty against rust and corrosion (posts, traverses, can rack panels and brackets).

Project _____

Item No. _____

Model No. _____

Quantity _____

CPU243672C96
Premium Unit (with Cans)

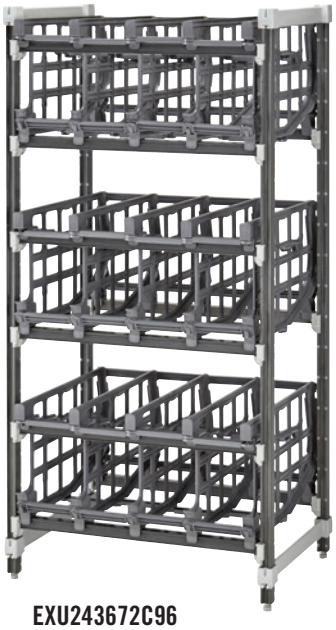

EXU243672C96
Elements XTRA Unit (Empty)

Holding Capacity per Unit

96 each #10 cans
144 each #5 cans

- Maximum weight bearing capacity per unit: 2000 lbs. (910 kg), evenly distributed.
- Available in 1 color: Speckled Gray (480).
- Ships knockdown.
- #10 Single and Add-on Can Racks are covered by U.S. Patent D828,145 S and D827,421 S.

Approvals

NSF COMPONENT

Post Connectors, Corner Connectors, Floor Fastener, Wall Fastener, Identification Tags, Shelf Rails, Single Shelf Security Cage, Peg Board and Shelf Divider Bars are not NSF listed.

CAMBRO

Information and specifications are subject to change without notice. Please confirm at time of order.

Telephone: (714) 848-1555 **Toll Free:** (800) 854-7631 **Customer Service:** (800) 833-3003

© Cambro Manufacturing Company Huntington Beach, California 92647

Printed in U.S.A. 09/24

www.cambro.com

Camshelving® Ultimate #10 Can Rack

Premium Series Full-Size Rack
Elements XTRA Series Full-Size Rack

Project _____

Item No. _____

Model No. _____

Quantity _____

Full Size Rack

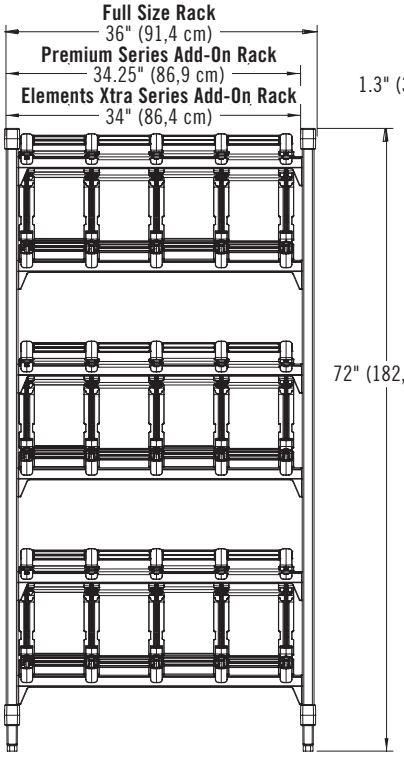

Front View

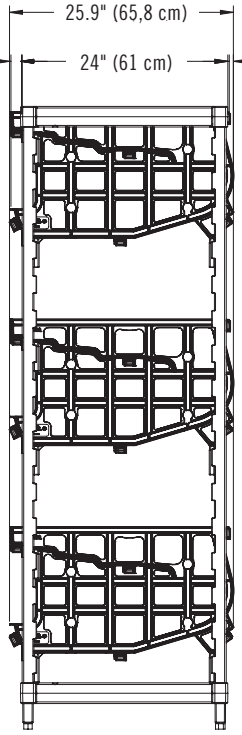

Side View

Can Rack Single Unit

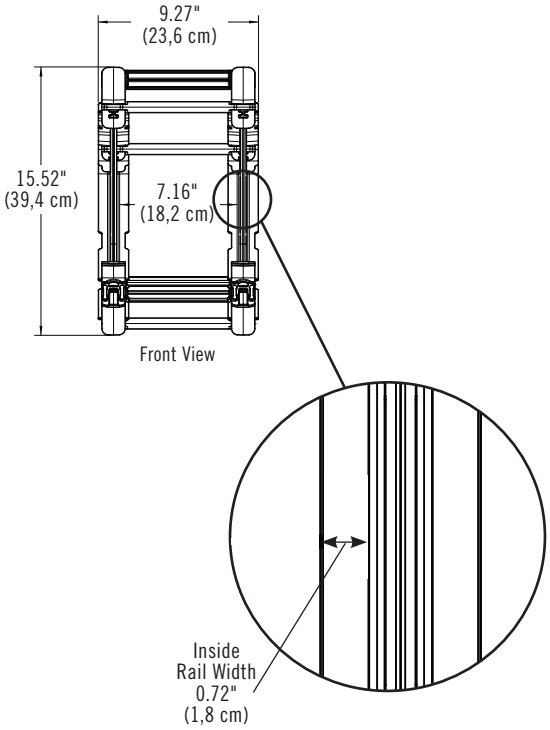

Front View

Specifications

Code	Description	Dimensions D x L x H	Unit Weight lbs. / kg
Premium Series			
CPU243672C96	Full-Size Starter Unit Rack	25.9" x 36" x 72" (65,8 x 91,4 x 182,9 cm)	107.1 (48,7)
CPA243672C96	Full-Size Add-on Unit Rack	25.9" x 34.25" x 72" (65,8 x 86,9 x 182,9 cm)	91.4 (41,6)
Elements XTRA Series			
EXU243672C96	Full-Size Starter Unit Rack	25.9" x 36" x 72" (65,8 x 91,4 x 182,9 cm)	85.3 (38,7)
EXA243672C96	Full-Size Add-on Unit Rack	25.9" x 34" x 72" (65,8 x 86,4 x 182,9 cm)	74.3 (33,7)

Color: Speckled Gray (480).

Architect Specs

Post and Traverses:
- Premium Series: Internal steel core, reinforced polypropylene exterior
- Elements XTRA Series: Proprietary non-corrosive composite material

Post Connectors: Reinforced polypropylene
Can Rack Panel and Bracket: Reinforced nylon
Post Connector Collar Wedges: Reinforced nylon (Elements XTRA Series Only)
Traverse Dovetails: Reinforced nylon (Elements XTRA Series Only)

Optional Accessories

- ❑ **Wall Fastener**
- ❑ **Floor Fastener**
- ❑ **Dunnage Stand**

Approvals

NSF COMPONENT

Post Connectors, Corner Connectors, Floor Fastener, Wall Fastener, Identification Tags, Shelf Rails, Single Shelf Security Cage, Peg Board and Shelf Divider Bars are not NSF listed.

CAMBRO

Information and specifications are subject to change without notice. Please confirm at time of order.

Telephone: (714) 848-1555 **Toll Free:** (800) 854-7631 **Customer Service:** (800) 833-3003

© Cambro Manufacturing Company Huntington Beach, California 92647

Printed in U.S.A. 09/24

www.cambro.com